LUMALIER

GL Series

UPPER AIR UVC FIXTURES

Upper-air UVC fixtures are engineered to provide very targeted UVC application in high-risk areas with ceilings that are 12′ or higher.

The open design of the GL series allows for a wide field of UVC above the heads of occupants. This allows these units to be highly effective in the upper-air space. Benefits include:

- Accommodates spaces with high ceilings where wall mounting is preferred
- Provides targeted UVC application
- Offers a solution for flexible space uses, as the units can be permanently or temporarily installed

Models

The GL series has a range of models to accommodate different effective coverage areas. The different models use either 1, 2 or 4 Philips PL-L UV lamps.

Works in high-risk areas such as athletic facilities, dining areas, retail businesses, and lobbies.

Provides targeted UVC application in spaces with high ceilings.

Creates repeated application of UVC to the air within defined spaces, through natural convection-currents.

Uses non-proprietary components for easier maintenance.

GL Series

UPPER AIR UVC FIXTURES

Standard Specifications

Lamp Specs	PL-L 18W, 35W, 60W TUV (non-proprietary)
Wavelength	254 Nanometers
Expected Lamp/ Bulb Rated Life[1]	18 months
Lamp Socket	Single Ended, 4 Pin, 2G11
Input Voltage	Self Regulated Electronic UV Ballast 120V
Coverage	800-1,200 sq. ft
Weight	GL-118 16lbs GL-218 18lbs GL-418 20lbs
Housing Finish	Stainless Steel & Aluminum
Electrical Requirement	See Ordering Guide
Certifications:	

ASHRAE	meets ASHRAE TC 2.09
EPA	EST. NO. 91347-TN-002
ETL	CDR100230620ATL-001A

Warranty	Lamps/2 years; Parts/5 years

[1]With 80% utilization

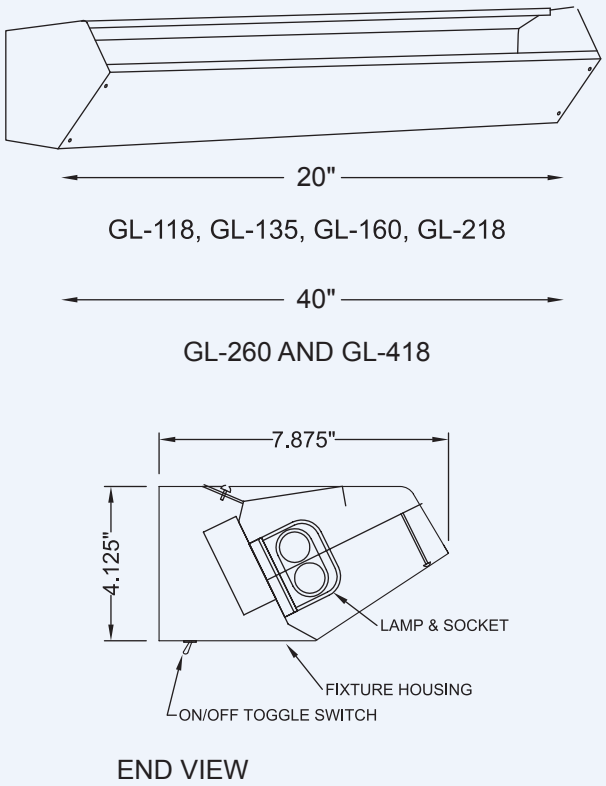

Due to continuing research, Lumalier reserves the right to change specifications without notice.

Ordering Guide

Model#	Mount Position	Lamp(s)	Field	Voltage	Power
GL-118	Wall-Mount	One 18 W, horizontal 9″	120°	0.15A@120V, 0.08A@240V	Power connection can be standard plug-in or hardwire
GL-218	Wall-Mount	Two 18 W, horizontal 9″	120°	0.30A@120V, 0.15A@240V	Power connection can be standard plug-in or hardwire
GL-418	Wall-Mount	Four 18 W, horizontal 9″	120°	0.60A@120V, 0.30A@240V	Power connection can be standard plug-in or hardwire
GL-160	Wall-Mount	One 60 W, horizontal 9″	120°	0.50A@120V, 0.25A@240V	Power connection can be standard plug-in or hardwire
GL-260	Wall-Mount	Two 60 W, horizontal 9″	120°	1.00A@120V, 0.50A@240V	Power connection can be standard plug-in or hardwire

LUMALIER
1931 Thomas Road | Memphis TN 38134 | 901-800-1709

©2025 Lumalier. All Rights Reserved.