LUMALIER

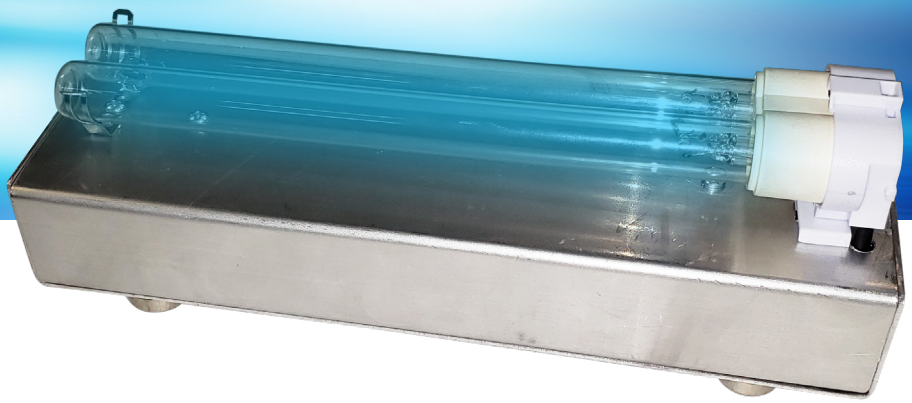

VFCU Series

IN AHU AND IN DUCT UVC FIXTURES

Our VFCU UVC system utilizes 254nm UVC light and is for use in small vertical fan coil and heat pump systems.

- Offers a smaller profile for narrow and confined spaces.
- Allows for easy installation and access for maintenance in the future.
- Eliminates chemical coil cleaning and helps to maintain/ increase efficiency of the coil and system.

Easy application of UVC in vertical fan coil A/C & heating units.

Works 24/7.

Non-proprietary components for ease of maintenance.

Models

The VFCU is available in three lamp sizes (35W, 60W, and 95W). All lamps are non-proprietary Philips lamps that are chill corrected to treat cold moving air.

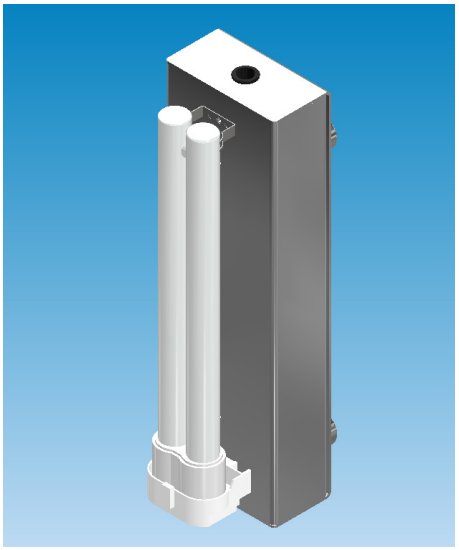

VFCU Series

IN AHU AND IN DUCT UVC FIXTURES

Standard Specifications

Lamp Specs	PL-L 35W, 60W, 95W TUV (non proprietary)
Wavelength	254 Nanometers
Expected Lamp/ Bulb Rated Life[1]	18 months
Lamp Socket	Single Ended, 4 Pin, 2G11
Lamp Qty.	1 x 35W UVC High Output Lamps
Input Voltage	Self Regulated Electronic UV Ballast 120V to 240V
Housing Finish	Aluminum
Electrical Requirement	Rated for 110V(1.05A) - 240V(0.53A) Only
Certifications:	ASHRAE: meets ASHRAE TC 2.09 EPA: EST. NO. 91347-TN-002
Warranty	Lamps/2 years; Parts/5 years

[1]With 80% utilization

Ordering Guide

Model	Description
VFCU-135	One 35 W, High Output 9″ lamp
VFCU-160	One 60 W, High Output 16″ lamp
VFCU-195	One 95 W, High Output 21″ lamp

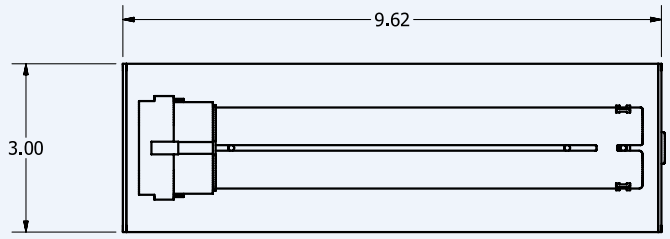

TOP VIEW

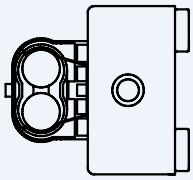

This drawing shows the side view with the different bulb lengths noted.
Note: The 60W and 95W bulbs extend past the aluminum housing.

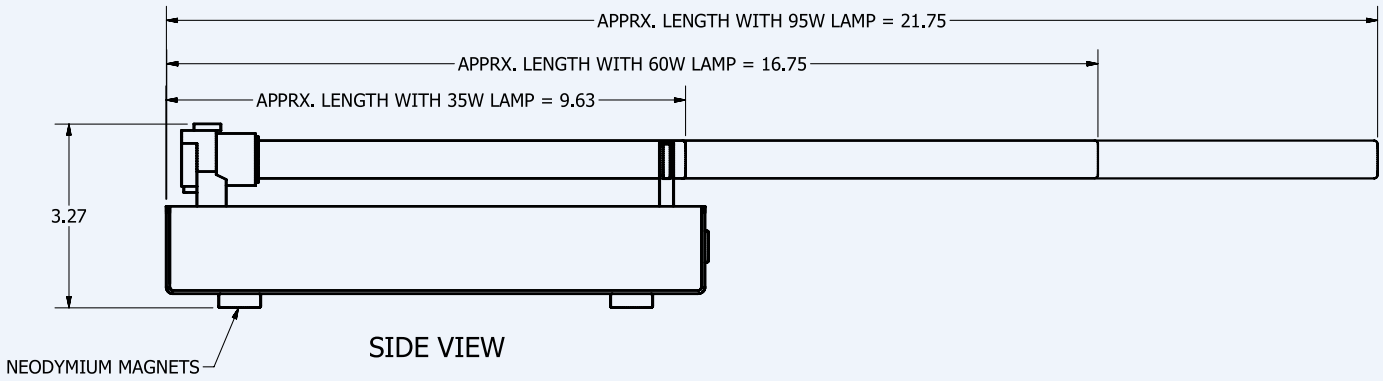

SIDE VIEW

Due to continuing research, Lumalier reserves the right to change specifications without notice.

LUMALIER
1931 Thomas Road | Memphis TN 38134 | 901-800-1709

©2025 Lumalier. All Rights Reserved.