LUMALIER
UV AIR & SURFACE DISINFECTION

EvergreenUV
Environmental Disinfection

Maintenance - Service - Safety - Installation For Lumalier UVGI Air & Surface Disinfector BLU-236 & BLU-436

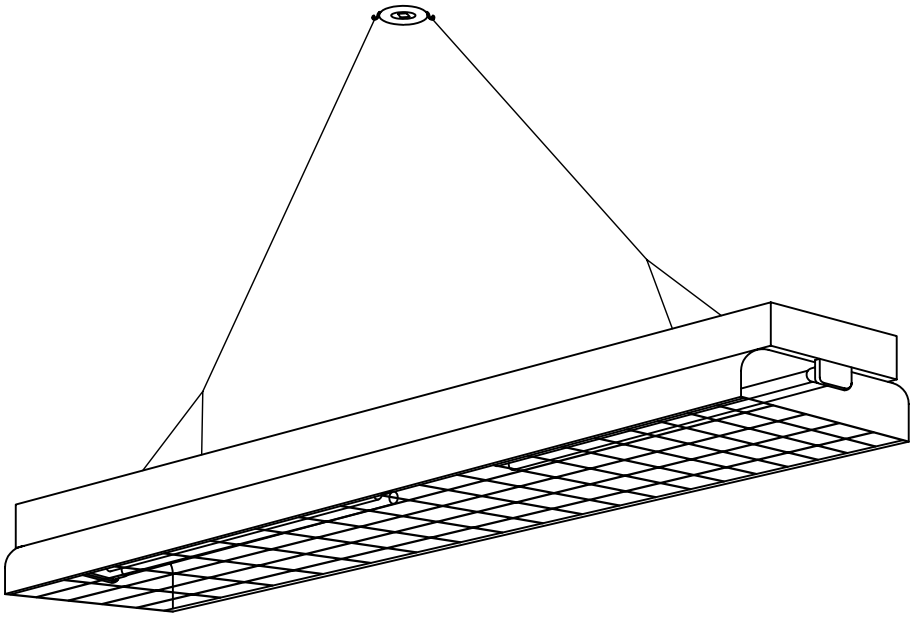

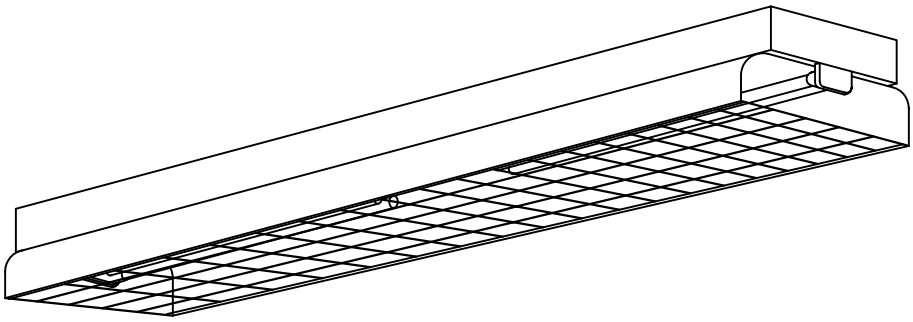

EvergreenUV
Environmental Disinfection

1931 Thomas Rd. Bartlett, TN 38134
email@evergreenuv.com 888-610-1709

Maintenance

Scheduled Maintenance Procedures

Quarterly – Visually inspect lamps through a viewing window to insure all lamps are operational.

Semi-Annually – If the lamps show visual dust accumulation, they should be cleaned.
To clean lamps:

- De-energize the fixture.
- Slide the 1” x 1” lamp guard grid out of one end of the fixture.
- Using soft cotton gloves, remove the lamps from the UV unit.
- Using a soft cotton cloth, with isopropyl alcohol, wipe the lamps and allow to dry.
- Replace the lamps.
- Reinstall the lamp guard grid.
- Turn on an exterior switch outside of UV exposure area..
- Inspect the lamps through a viewing port/glass window to insure all lamps are energized.

Annually – Replace the lamps.
To replace lamps:

- De-energize the fixture.
- Slide the 1” x 1” lamp guard grid out of one end of the fixture.
- Remove the old or burned-out lamps from the fixture.
- Wearing soft cotton gloves and using a soft cotton cloth, with isopropyl alcohol, wipe the new lamps and allow to dry.
- Install the new lamps.
- Turn on an exterior switch outside of UV exposure area.
- Inspect the lamps through a viewing port/glass window to insure all lamps are energized.

Service

Lumalier/EvergreenUV replacement parts and lamps can be purchased from factory. For information call 901-800-1709

.

Warranty

1-year warranty on lamps and 5-year warranty on workmanship & materials.

EvergreenUV
Environmental Disinfection

What is UVGI?

UV-C, also known as “germicidal ultraviolet”, has a **specific wavelength of 253.7nanometers (253.7 billionths of a meter)** and is known to deactivate molds, spores and germs contained in tiny airborne droplet nuclei that transmit diseases such as measles, tuberculosis, and influenza from person to person. With significant penetrating ability, UV-C can penetrate the cell wall of a microorganism and destroy it but it cannot penetrate the outer layer of human skin or the cornea of the eye. Although overexposure may lead to a temporary, minor eye irritation or skin reddening it does not cause serious or long-term health effects.

Safety

Personal Protective Equipment

Employees must wear personal protective equipment whenever UV radiation measurements are being made close to the lamp source in order to document lamp output, or when maintenance procedures must be performed in areas where UVGI systems are activated. Personal Protection Equipment includes:

- Safety glasses with side shields
- Head, neck and face covering opaque to UV radiation
- Soft cotton gloves
- Long-sleeved, tightly woven fabrics with SPF 15 or greater

Reporting UV Exposure

Should any eye or skin irritation that develops after acute exposure to UV radiation one should contact their supervisor or physician.

EvergreenUV
Environmental Disinfection

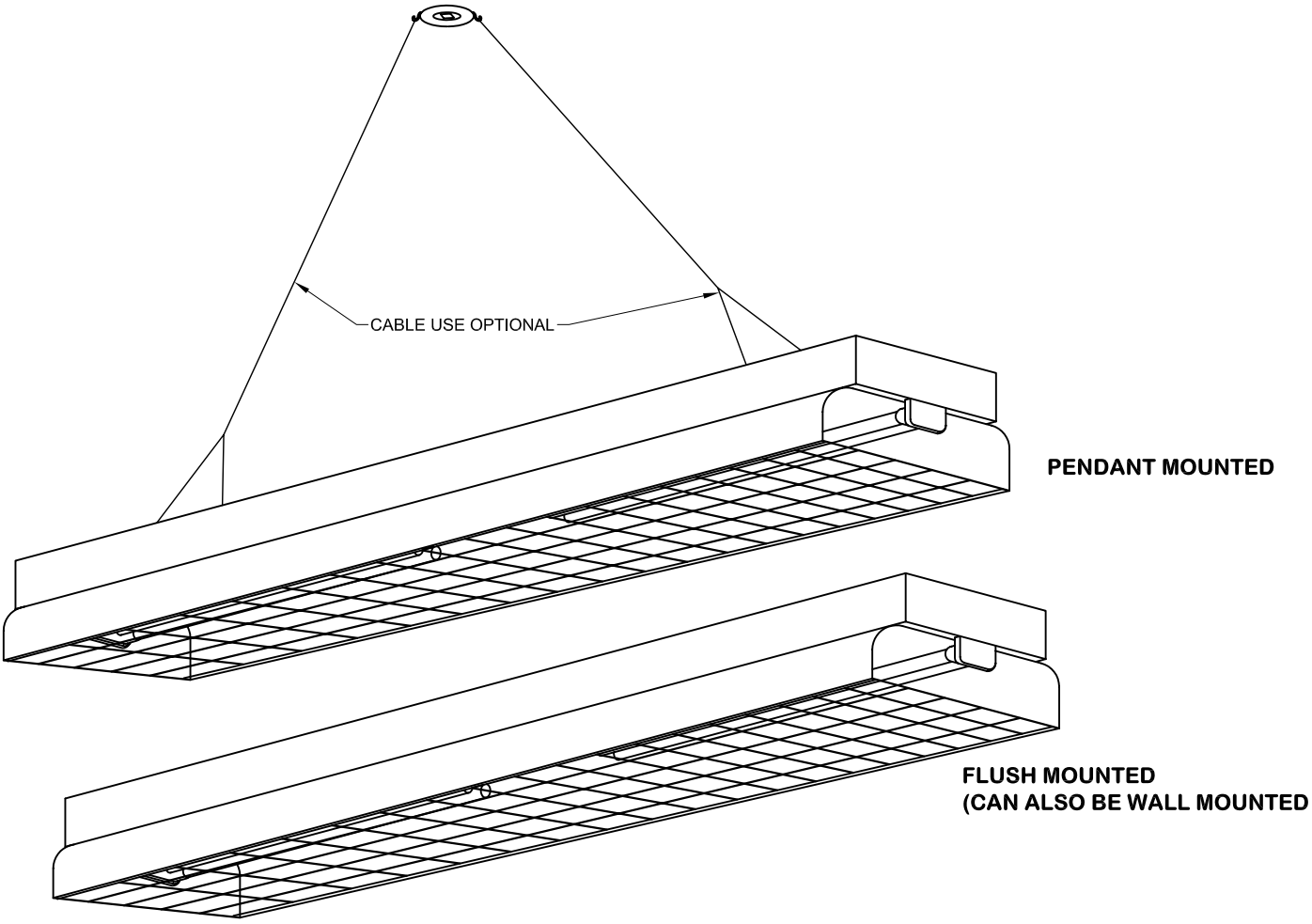

CATALOG NO. BLU 236

NOMINAL LENGTH: 36"

LAMPS: (2) PL-LTUV36W; UV WATTS=24 UVW; NOMINAL WATTS=72W

ELECTRICAL REQUIREMENTS: 120V/1.56A THROUGH 277V/0.66A; 50-60 Hz.

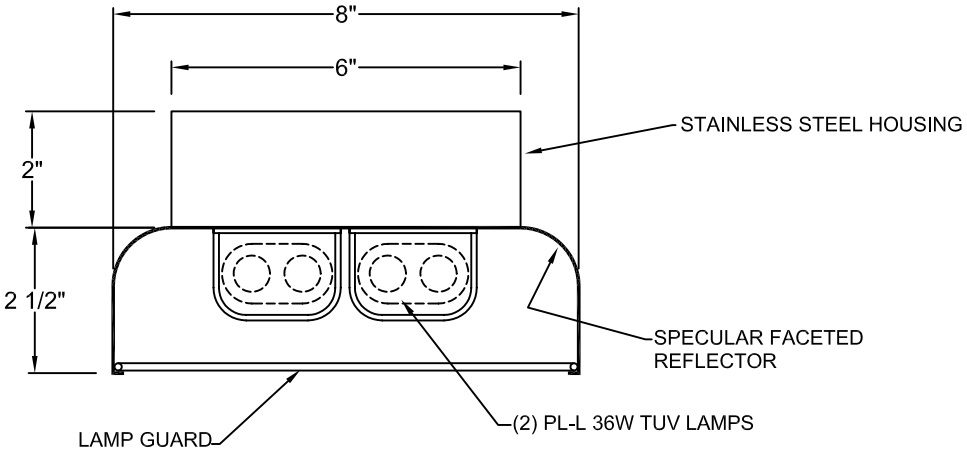

DATA SHEET

EvergreenUV
Environmental Disinfection

LUMALIER
UV AIR & SURFACE DISINFECTION

1931 Thomas Rd.
901-800-1709

Bartlett, TN 38134
email@evergreenUV.com

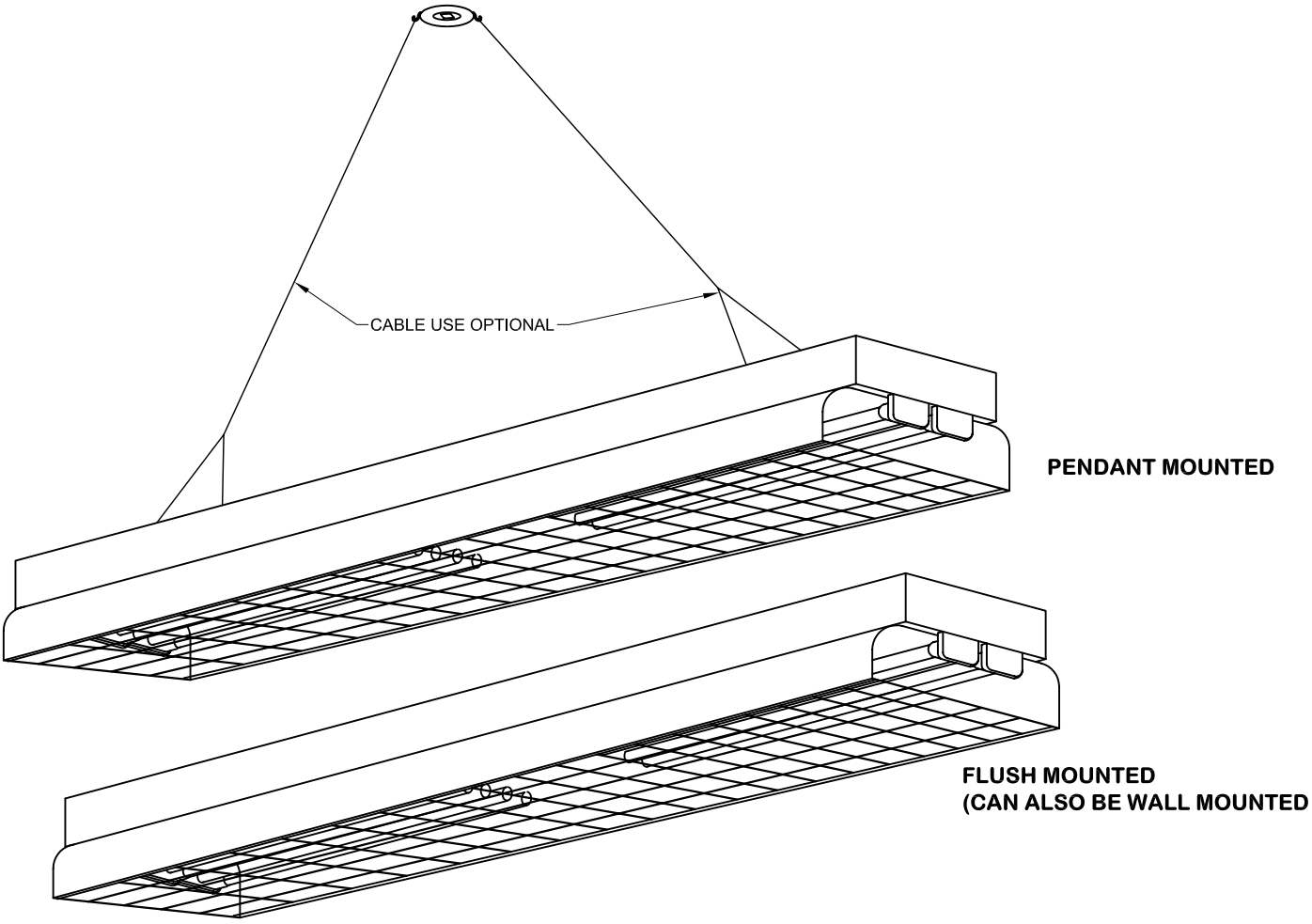

CATALOG NO. BLU 436

NOMINAL LENGTH: 36"

LAMPS: (4) PL-LTUV36W; UV WATTS: 48 UVW; NOMINAL WATTS: 144 W; 26,400 µW/cm² TOTAL.

ELECTRICAL REQUIREMENTS: 120V/1.56A THROUGH 277V/0.66A; 50-60 Hz.

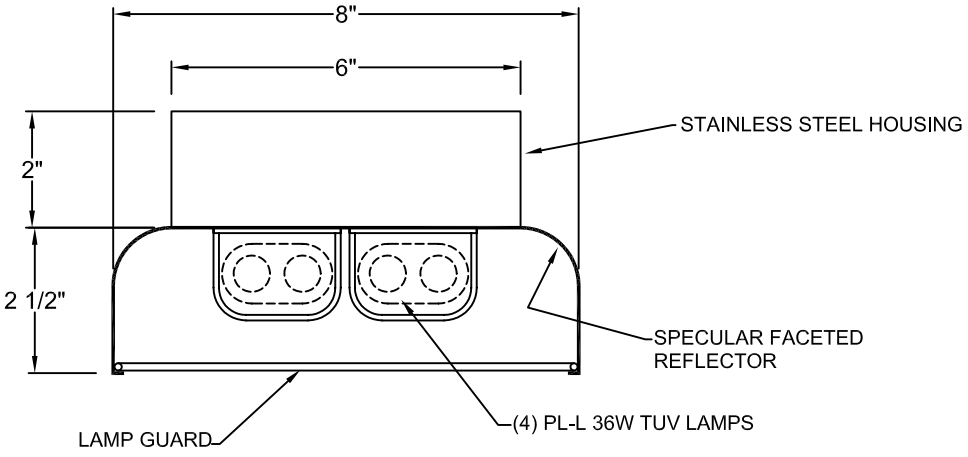

DATA SHEET

EvergreenUV
Environmental Disinfection

LUMALIER
UV AIR & SURFACE DISINFECTION

1931 Thomas Rd.
901-800-1709

Bartlett, TN 38134
email@evergreenUV.com

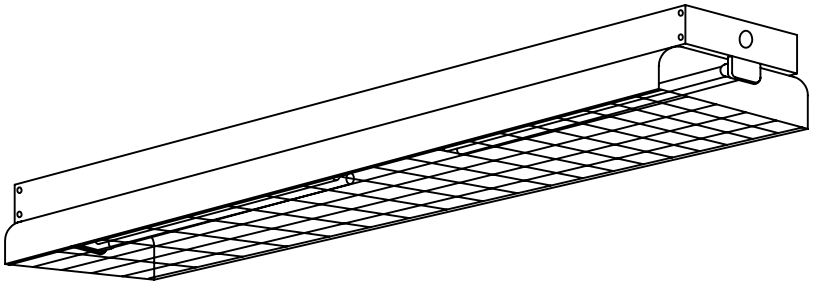

1. Disconnect power to fixture location. Be sure that the mounting structure will safely support the weight of the entire fixture so that no immediate or future damge will occur to persons or property. All work to be performed by a licensed electrician & in accordance with the National Electrical Code and any local codes.
2. Remove the reflector/lamp guard assembly by removing the screws indicated below.
3. Position the fixture housing so as to route the house wiring into the fixture. Secure the housing to the mounting surface thru the holes provided using appropriate anchors (by others).
4. Make-up wiring connections. Fixture wiring color code is: black = hot, white = neutral, green = ground.
5. Lamp fixture and reinstall lamp guard.

Risk of exposure to excessive ultraviolet (UV) radiation - Do not operate without complete lamp enclosure in place or if glass lens is damaged.

This fixture is designed for use with germicidal lamps and must be installed in compliance with competent technical directions so that user's eyes and bare skin will not be subjected to injurious rays.

WARNING:Eye damage may result from directly viewing the light produced by these lamps. To reduce the risk of exposure to UV-radiation, take UV-radiation protective measures for personnel during servicing.

WARNING: Do not mount in direct line-of-sight of adjacent wiring or nonmetallic materials.

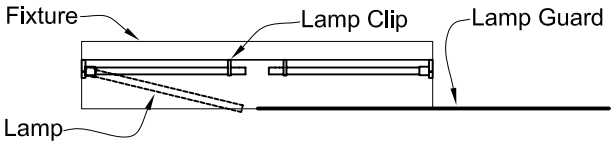

To relamp fixture, slide the lamp guard halfway out one end & pull end of lamp down & out of lamp clip, then remove lamp. Install new lamp in reverse procedure as removing.

CEILING FLUSH MOUNT INSTALLATION

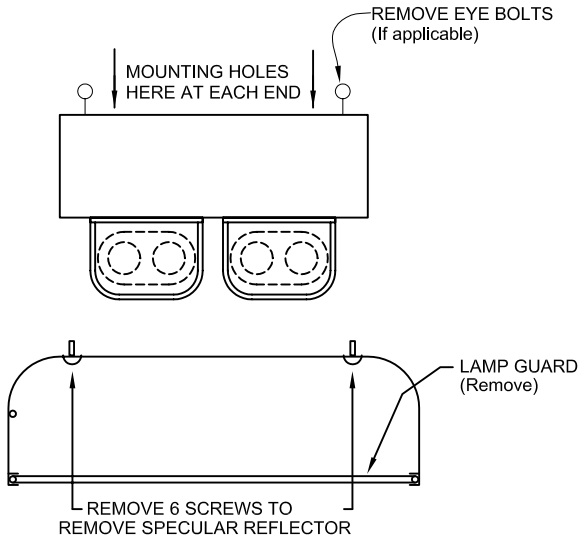

N.T.S.

CABLE-HUNG INSTALLATION

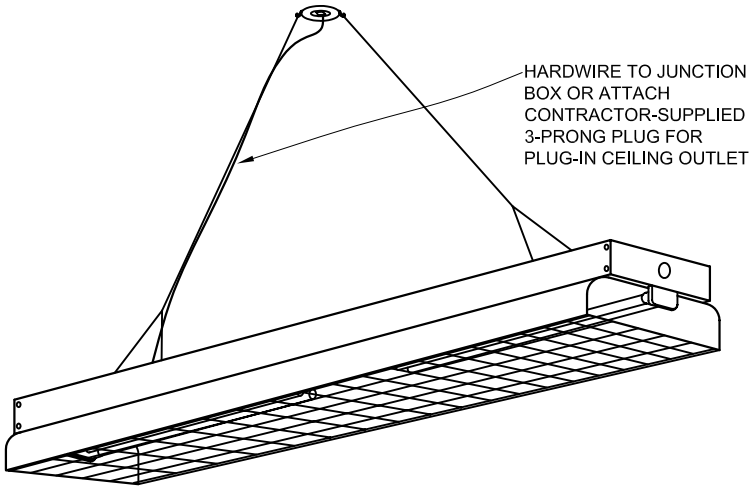

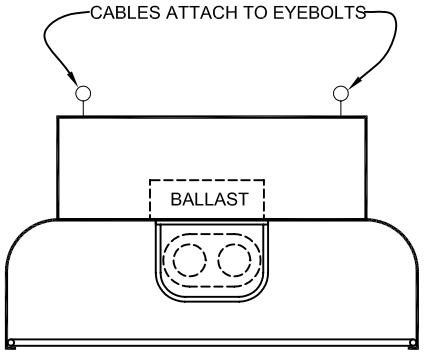

INSTALLATION INSTRUCTIONS

BLU SERIES

RL0061114TJG-BLUSERIESINSTALLS

EvergreenUV Environmental Disinfection

LUMALIER UV AIR & SURFACE DISINFECTION

1931 Thomas Rd.
901-800-1709

Bartlett, TN 38134
email@evergreenUV.com

Troubleshooting Guide, Lumalier Model BLU

Issue	Probable Cause and Solution
Single lamp flickers	Lamp is not securely seated in the socket. ○ Remove and securely reseat lamp Lamp is defective or at the end of its life cycle ○ Replace with new lamp
Row of lamps flicker	Connection between lamps may be loose. ○ Check all electrical connections
Single lamp is out	Lamp is not securely seated in the socket. ○ Remove and securely reseat the lamp Lamp is defective or at the end of its life cycle ○ Replace with new lamp Lamp socket is broken or defective ○ Replace broken lamp socket Ballast is defective NOTE: On most BLU units, one ballast is used to power two lamps; if the ballast is defective, two lamps will fail to illuminate. One ballast can power one lamp also.
Two lamps are out	On all BLU units if neither lamp will energize, or if either of the two lamps is 'burned',or improperly seated in the socket, or if the ballast is defective. ○ Check to insure both lamps are securely seated in their lamp sockets. ○ Replace one of the lamps, but do not dispose of the removed lamp. If both lamps fail to energize, replace the second lamp with the lamp removed from the first socket. If both lamps again fail to energize, replace both lamps. If both new lamps fail to energize, check wiring to the ballast. If wiring appears to be OK, replace the ballast.

Troubleshooting Guide, Lumalier model BLU Continued

NOTE:

To prevent damage to lamps or sockets, follow lamp replacement instructions carefully. Insert the 4 pin base of the lamp into the lamp socket at an angle then while holding the lamp base in socket, rotate free end of lamp up into the metal lamp clip while at the same time making sure that the free side of the lamp base snaps into the locking tab on the socket. A ‘click’ will be heard or felt when the lamp is properly seated. Removal is performed by reversing this action.

Always use gloves to avoid surface contamination of the lamp. Always dispose of lamps in accordance with local waste disposal laws. For reference, Philips lamps contain $\leq$ 5mg of Mercury.

Ballast replacement requires proper training, tools and skills. DO NOT attempt to secure wiring or replace ballasts without proper knowledge and training to do so.

BLU Parts List

Part	Manufacturer	Part No.	Description
Ballast	Advance	IUV-2S36-M2-LD	Multi voltage 120 thru 277
Sockets	Edwin Gaynor	286-SC	75W 600V
Wire	TEWN	18Ga.	Black, white, green, red, blue, yellow
Fuse	ADL	MDL-10	10A; to 480V;Enclosed Snap-action
Fuse Holder	BUSS	HKP-HH	15A
Lamps	Philips	PL-L 36W TUV	
Squeeze Connectors	3M	L501	Drop-down
Toggle Switch	OMRON	085720134	1/4A/250V;3/4A/125V
Optional 9’-0” Power Cord		E243929	3-Conductor

PHILIPS

Philips Lighting Company

MATERIAL SAFETY DATA SHEET S06-03001
Revised: 12/2012

PRODUCT: TUV Germicidal Lamps

SECTION 1: MANUFACTURER

Manufacturer's Name and Address: Philips Lighting Company
A Division of Philips Electronics
North America Corporation
200 Franklin Square Drive
Somerset, NJ 08873-4186

Emergency Telephone No: (800) 424-9300 CHEMTREC
(800) 555-0050 Philips Lighting Technical Information

SECTION 2: HAZARDOUS INGREDIENTS

	OSHA (PEL) mg/m^3	ACGIH (TLV) mg/m^3 TWA	% by Wt.
Inert Ingredients (Glass, Metal, etc.)			~ 99
Mercury (7439-97-6)	.1	.025	~0.1

Mercury is inside the lamp, breakage may result in exposure.

SECTION 3: PHYSICAL CHEMICAL CHARACTERISTICS

This item is a glass light bulb. The mercury is inside the bulb, chemical characteristics of the bulb are not applicable. This bulb can crack if hit with a heavy object.

SECTION 4: FIRE AND EXPLOSION DATA

Glass is not a combustible, melting point is over 900°F. Fire and explosion data are not applicable. Under extreme heat, the bulb might crack or melt.

SECTION 5: REACTVITY DATA

Stability: Lamp is stable.
Incompatibility: Glass can be attacked by hydrofluoric acid.
Polymerization: Not Applicable.

SECTION 6: HEALTH EFFECTS

DANGER: These lamps emit ULTRAVIOLET RADIATION (UVC). Avoid exposure. Ultraviolet radiation is harmful to the skin and the eyes and can cause serious skin burns and eye injury either from direct or reflected radiation. To reduce the risk of personal injury, install only in fixtures which provide adequate protection to area occupants. Should not be used for illumination purposes.

SECTION 7: PRECAUTIONS FOR SAFE HANDLING AND USE

Consult the fixture manufacturer regarding the suitability of the fixture for this lamp. Operate with proper auxiliary equipment. Turn off lamps before installing, replacing, cleaning or performing any maintenance work near fixtures.

Handle lamps carefully to avoid breakage. Broken glass can cause cuts.

Waste Disposal Method: At the end of rated life, when this lamp is removed from service, it will be subjected to the current Toxic Characteristic Leaching Procedure (TCLP) prescribed by the Environmental Protection Agency. This test is used to determine whether an item is a hazardous waste or a non-hazardous waste under current EPA definitions. These lamps would fail the TCLP test and would be considered hazardous under the Universal Waste Rules. Generators should evaluate all of the disposal options, which may be available in the particular state in which the generator's facility is located. The generator should check with federal, state and local officials for their guidance. Philips encourages recycling of its products by qualified recyclers.

SECTION 8: CONTROL MEASURES

Do not operate under these lamps without personal protective equipment. (Goggles, glove, skin protection)

Respiratory protection: If large numbers of these lamps are being broken an appropriate respirator should be considered. Note: Crushing of lamps on site may require a permit from state or federal authorities. We recommend recycling as the preferred disposal option.

Ventilation: Avoid inhalation of airborne dust

Hand and eye protection should be worn when handling broken glass.

SECTION 9: REGULATORY INFORMATION

As a product these mercury-containing lamps, when shipped in the manufacturer's original packaging, are not regulated for ground or ocean shipment.

This material safety data sheet does not constitute "knowledge of the waste" in certain jurisdictions.

08/2005 S06-03001
Revised: 12/2012